esbath
made to mesure

expertbath

// MAMPARA DE BAÑO // PAROIS DE DOUCHE // SHOWER ENCLOSURE //
// CABINA DOCCIA //DUSCHABTRENNUNG // RESGUARDO DE DUCHE //

SHAWA D10

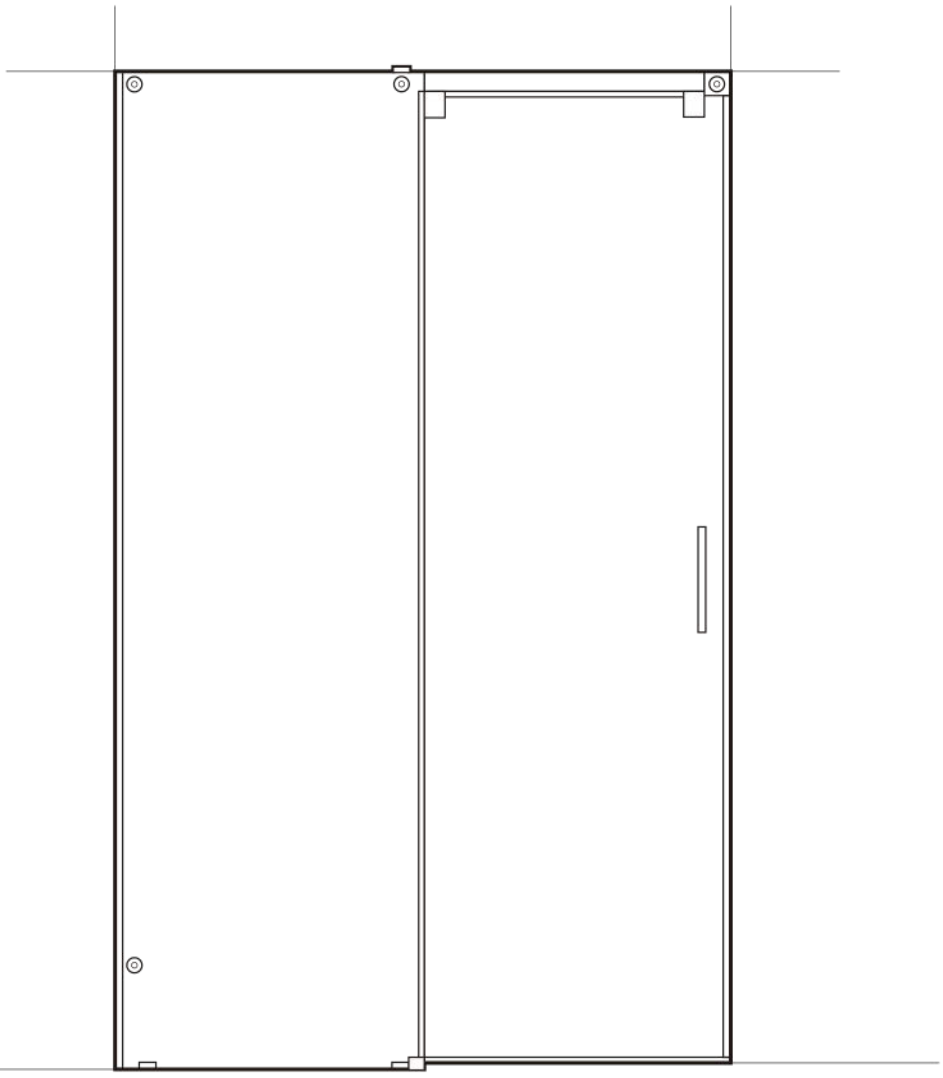

(ES)
(FR)
(EN)
(IT)
(DE)
(PT)

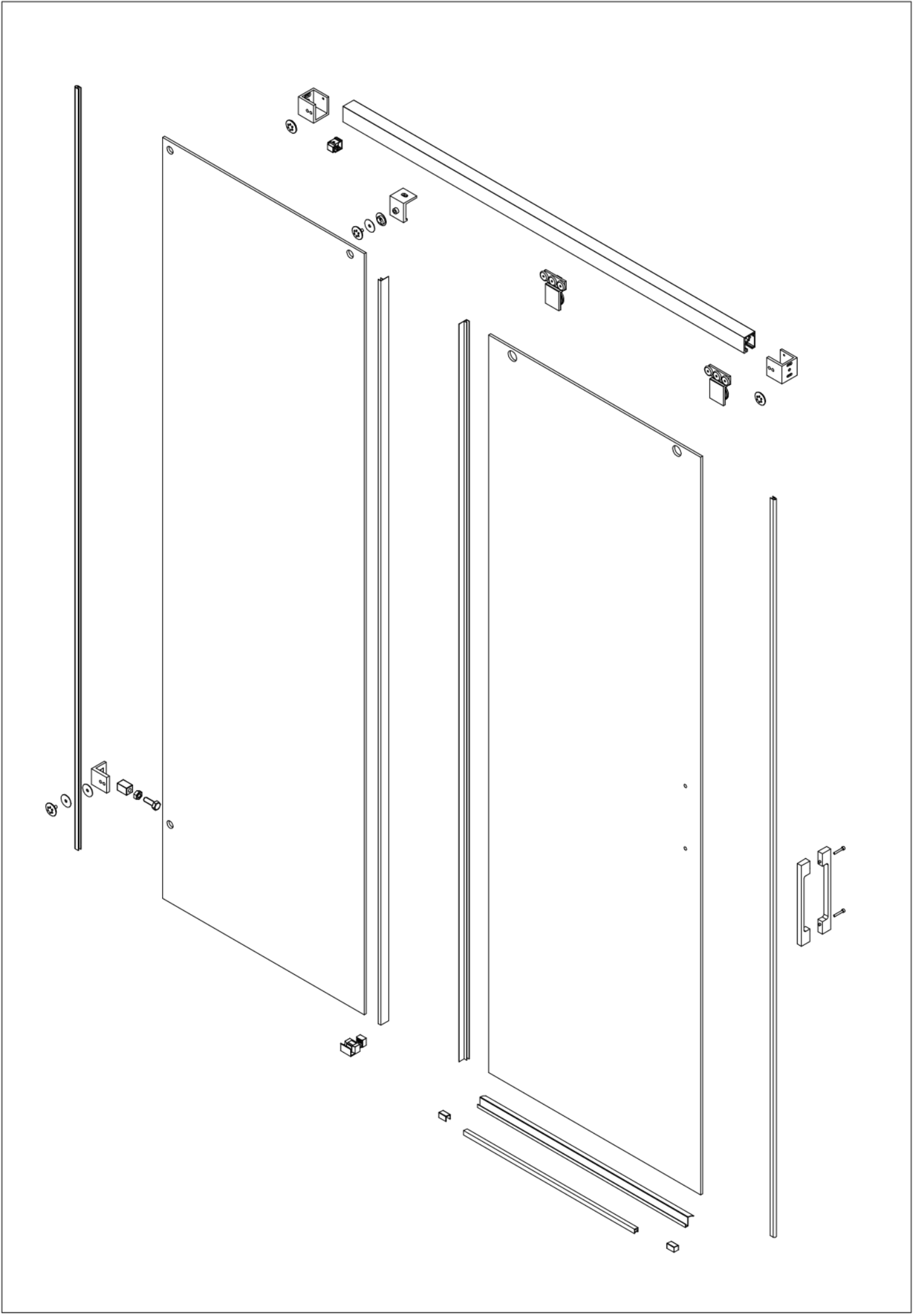

M-01		1	M-02		1
M-03		1	M-04		1
M-05		1	M-06		1
		1	M-08		1
M-09		1	M-10		1
			M-12		3
M-13		1	M-14		1
			M-16		1
M-17		2			
M-19		1	M-20		2
M-21	DIN 7982 4,2x16	3	M-22		2
M-23	DIN 7982 4,2x32	5	M-24		5
M-25		1	M-26		1

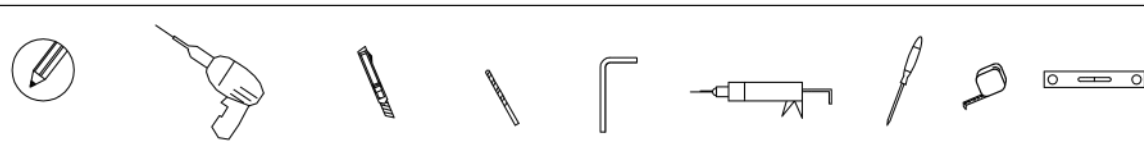

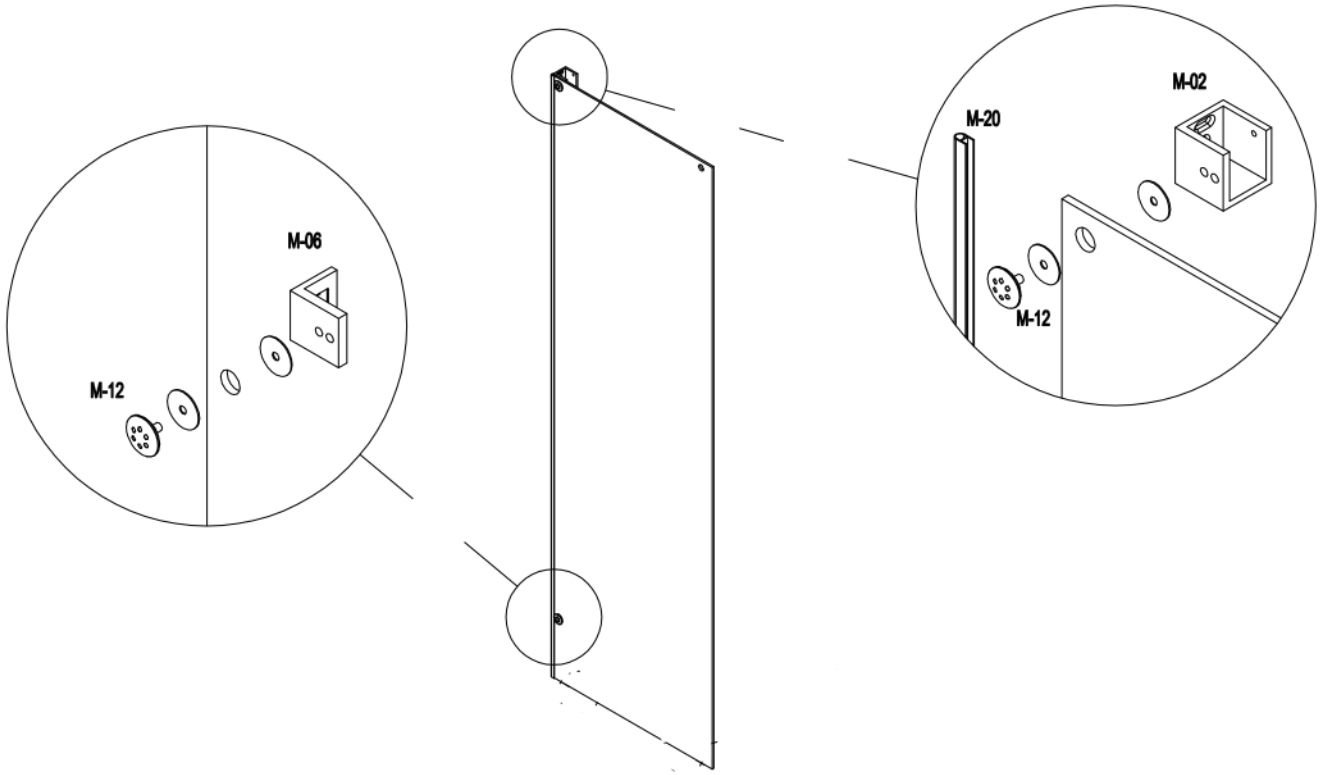
M-06
M-12
M-20
M-02
M-12

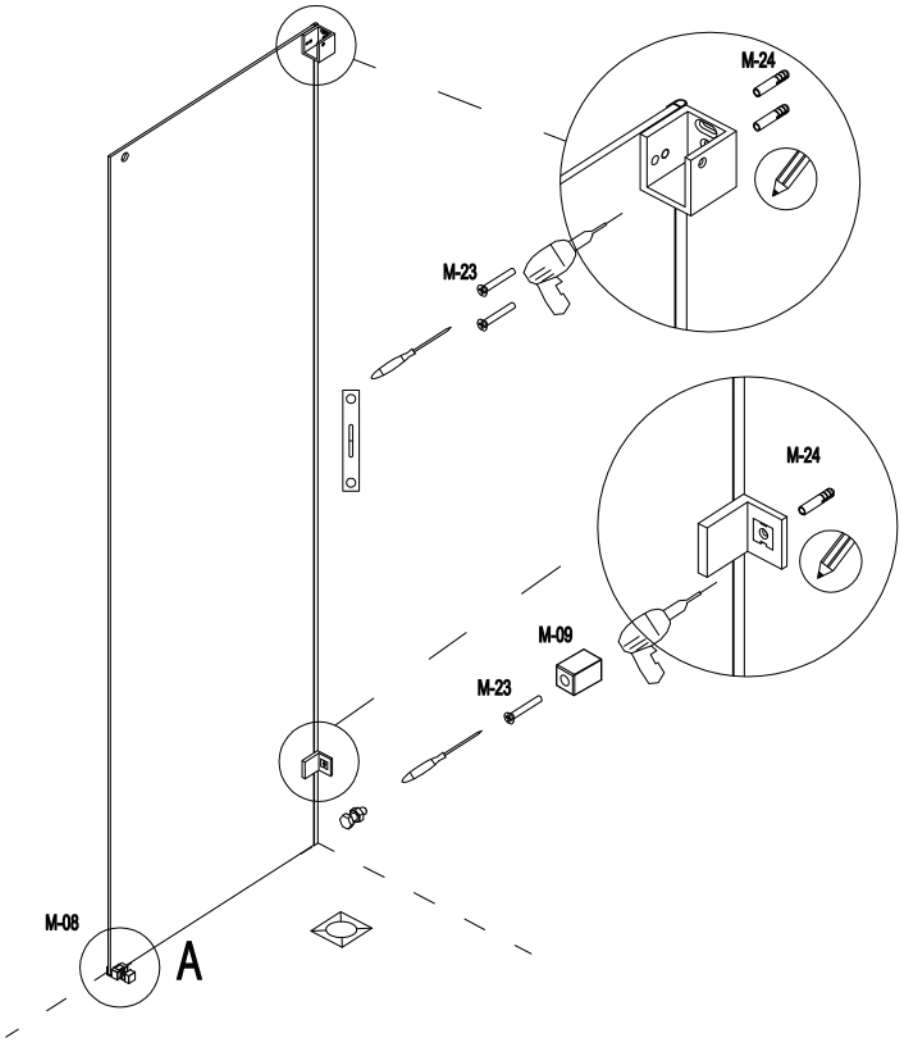
M-24
M-23
M-24
M-09
M-23
M-08
A

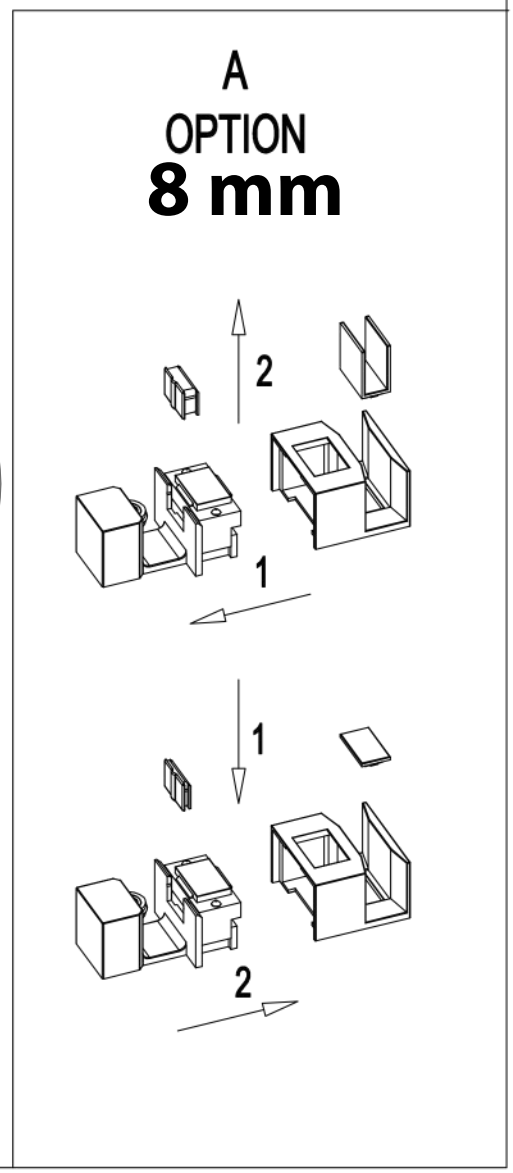
A
OPTION
8 mm
2
1
1
2

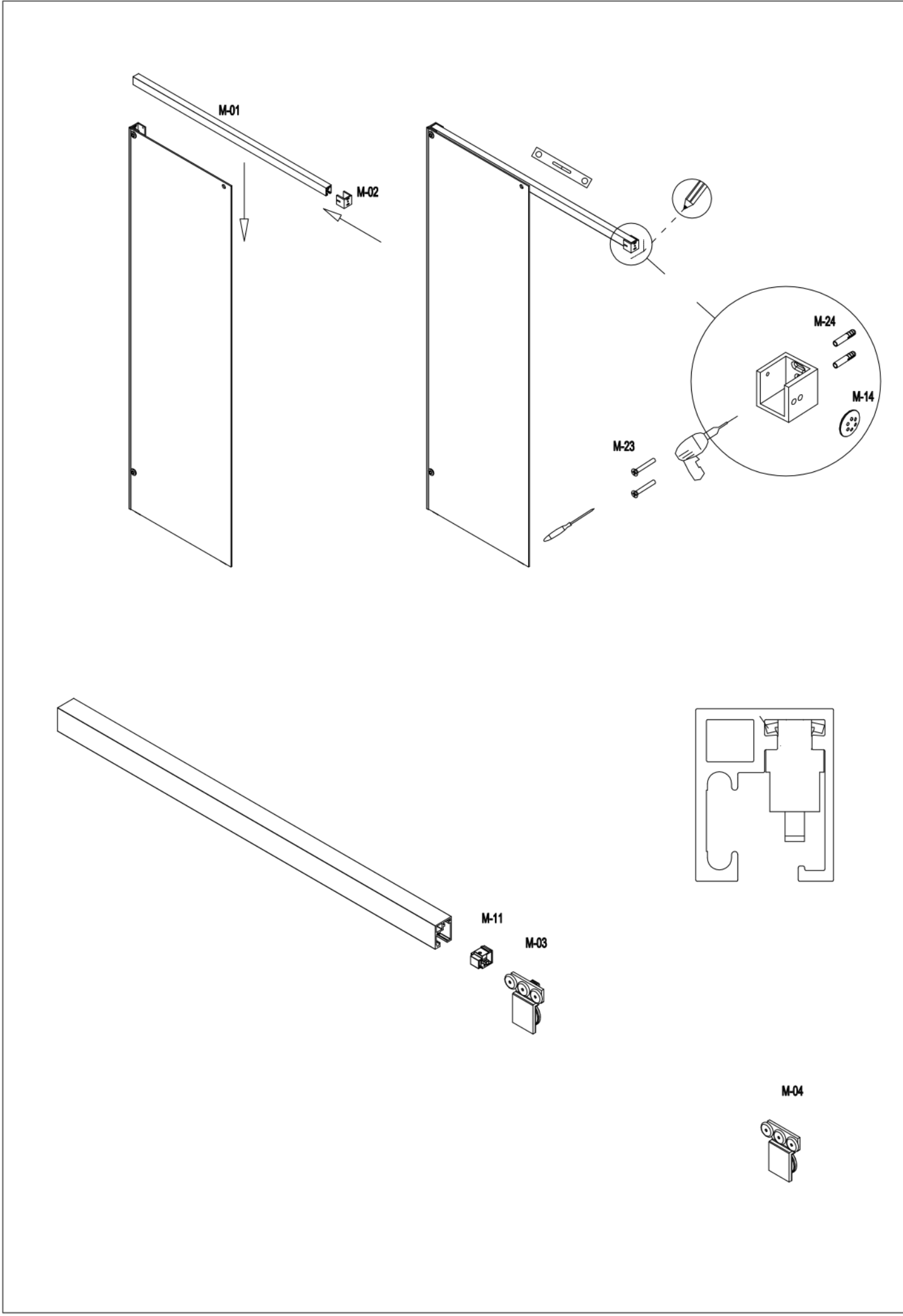
M-01
M-02
M-24
M-14
M-23
M-11
M-03
M-04

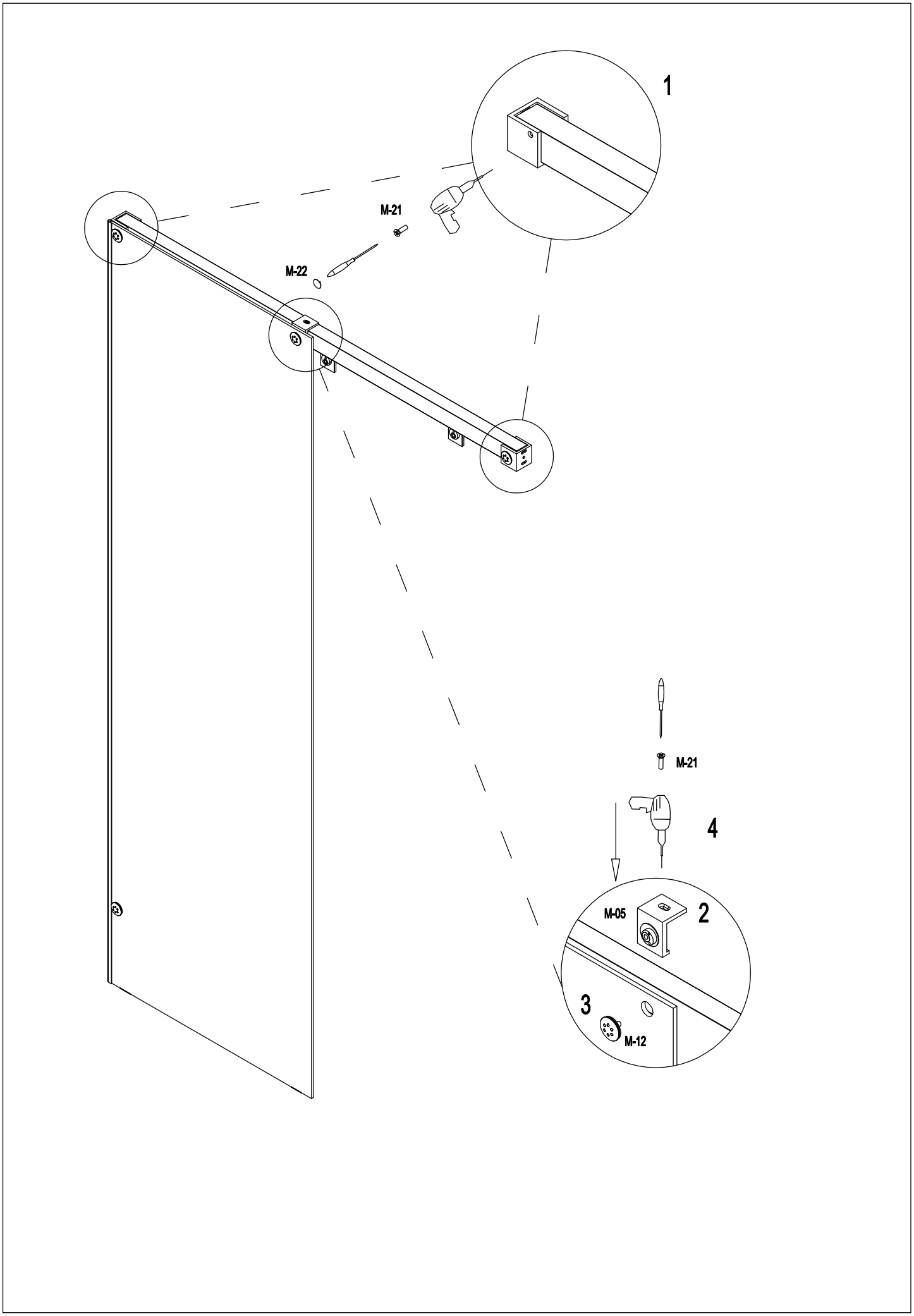
1
M-21
M-22
M-21
4
M-05
2
3
M-12

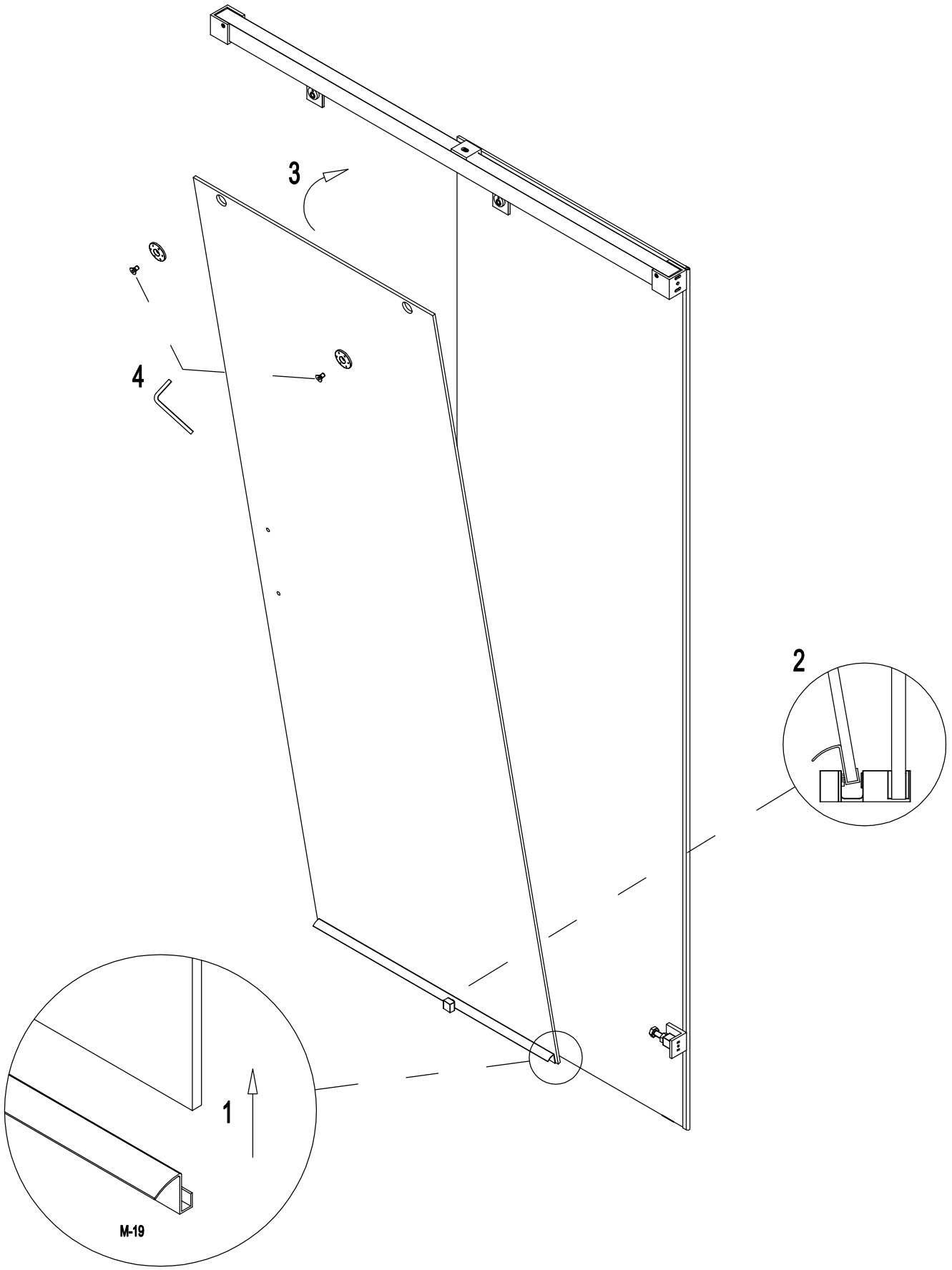
3
4
2
1
M-19

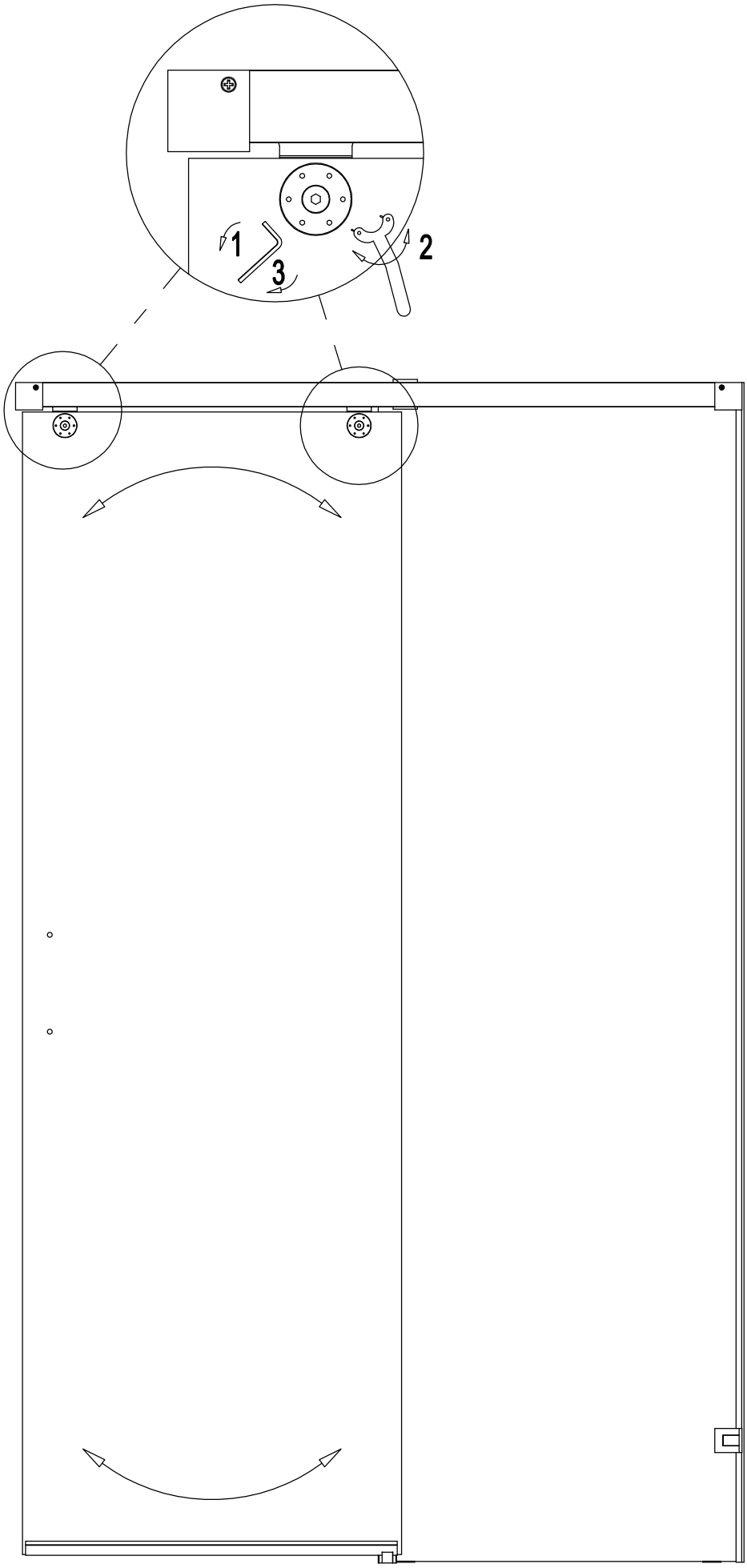
1
2
3

OPTION A

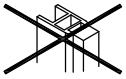

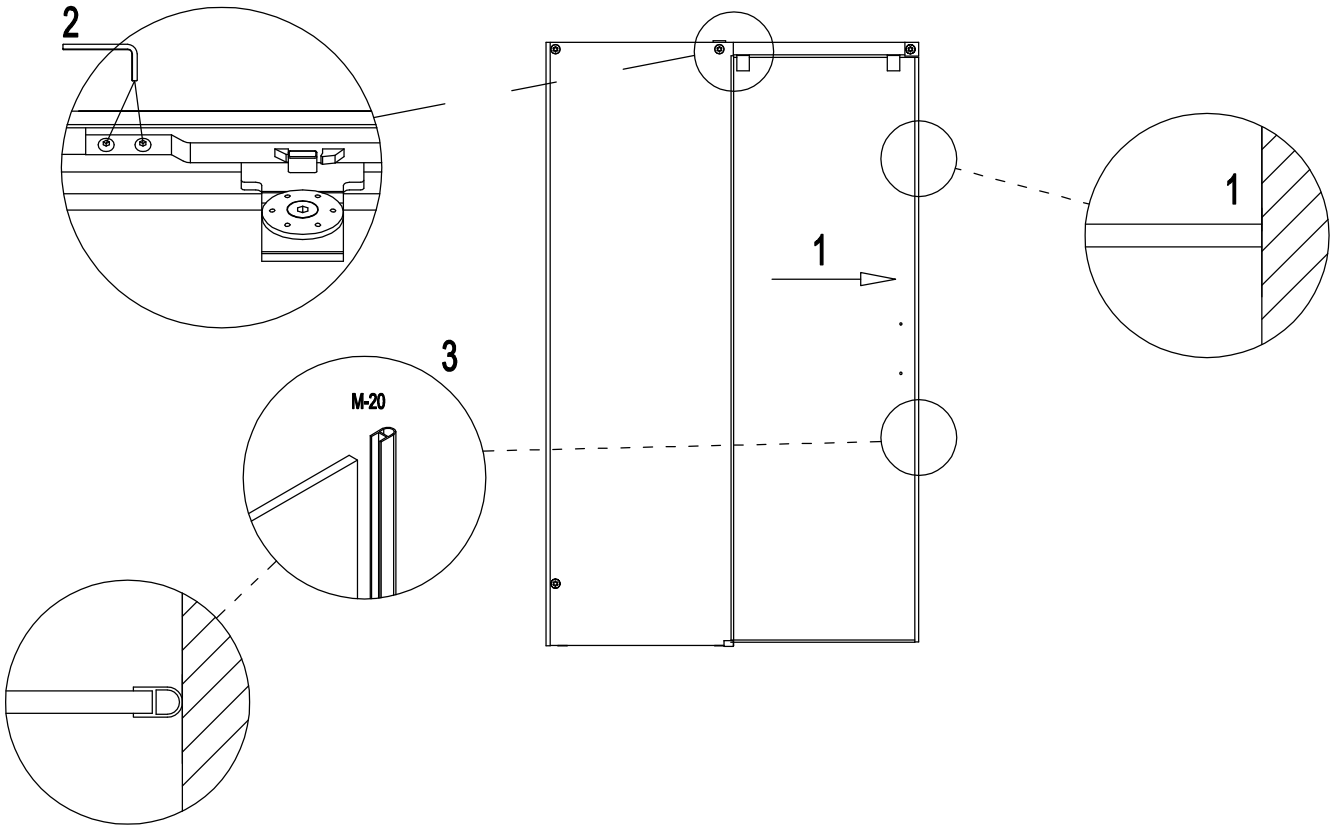

OPTION B

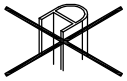

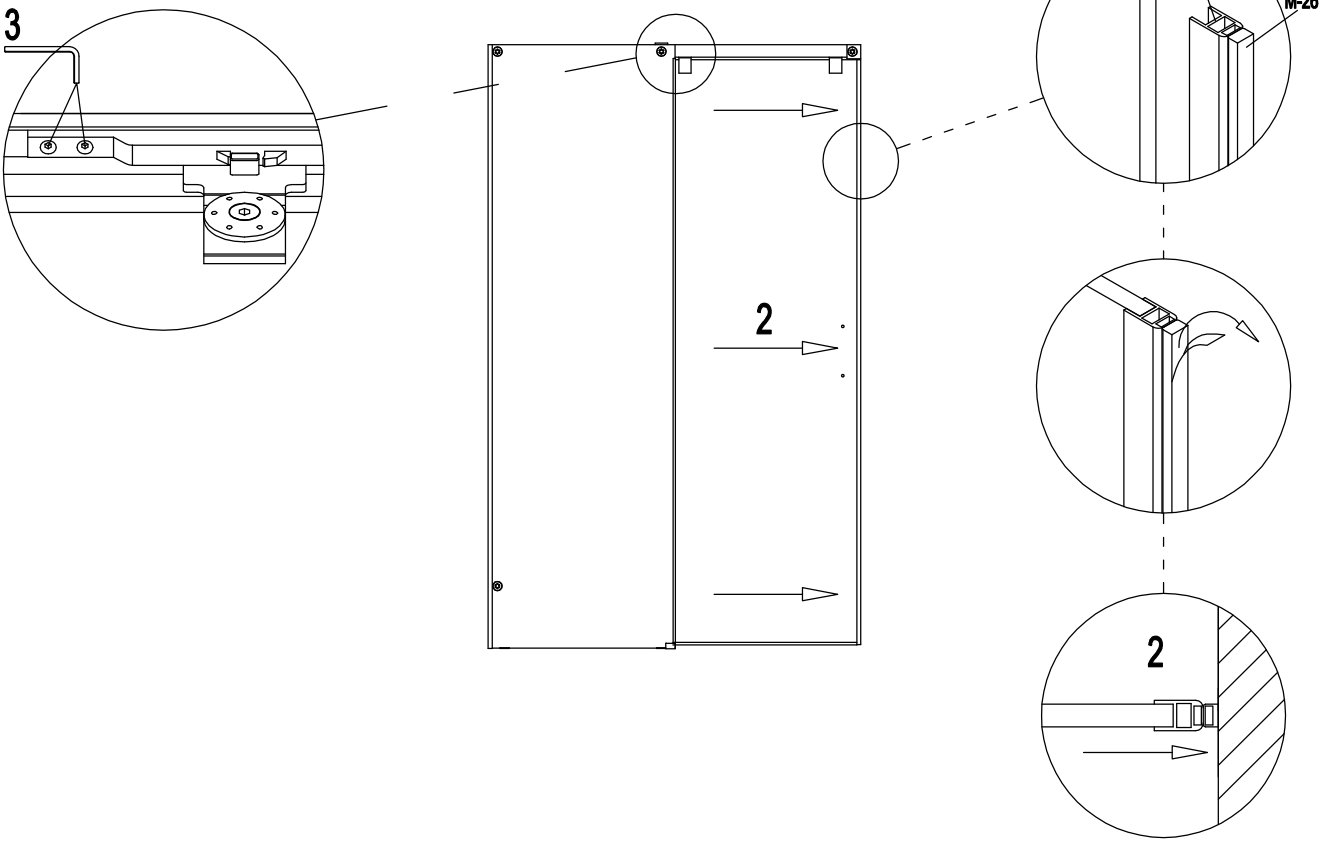

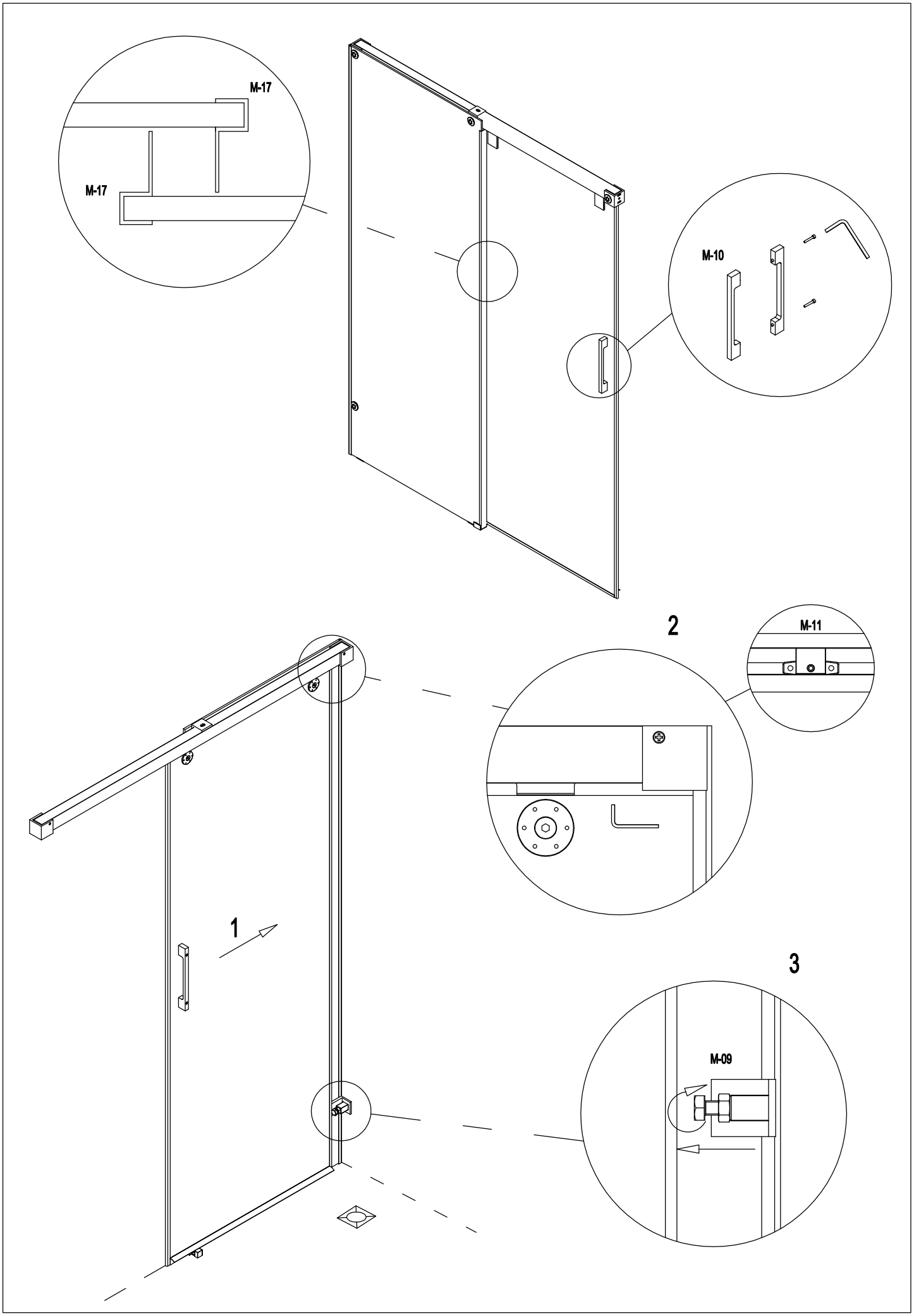
M-17
M-17
M-10
2
M-11
1
3
M-09

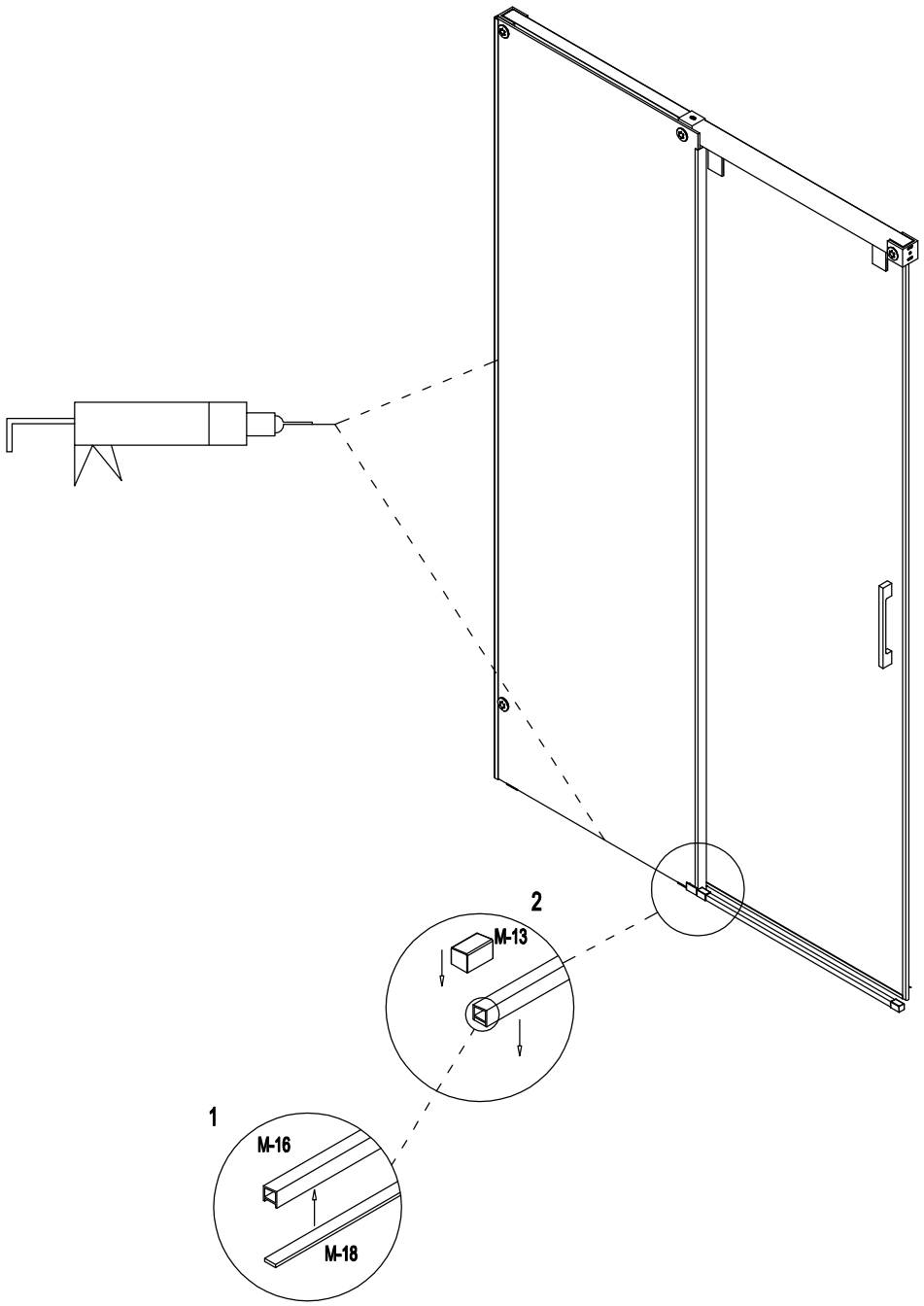
2
M-13
1
M-16
M-18

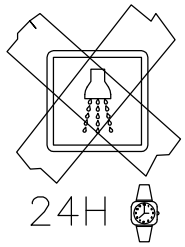
24H

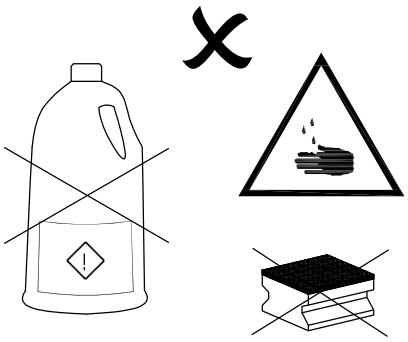

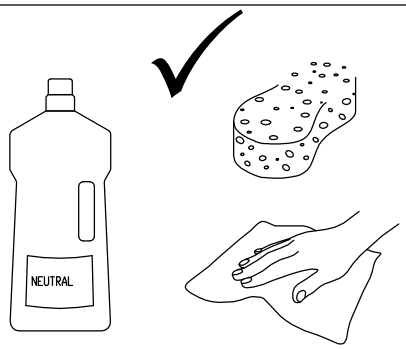
NEUTRAL

expertbath

esbath

made to mesure

ISO 9001
BUREAU VERITAS
Certification

EUROPEAN SYSTEMS SERVICES
contact@expertbath.com

13

UNE-EN 14428